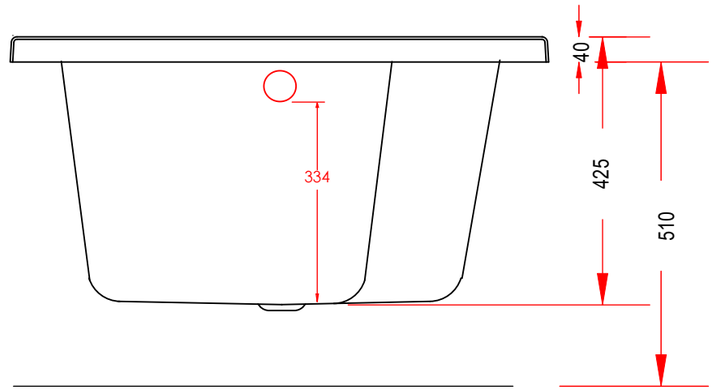

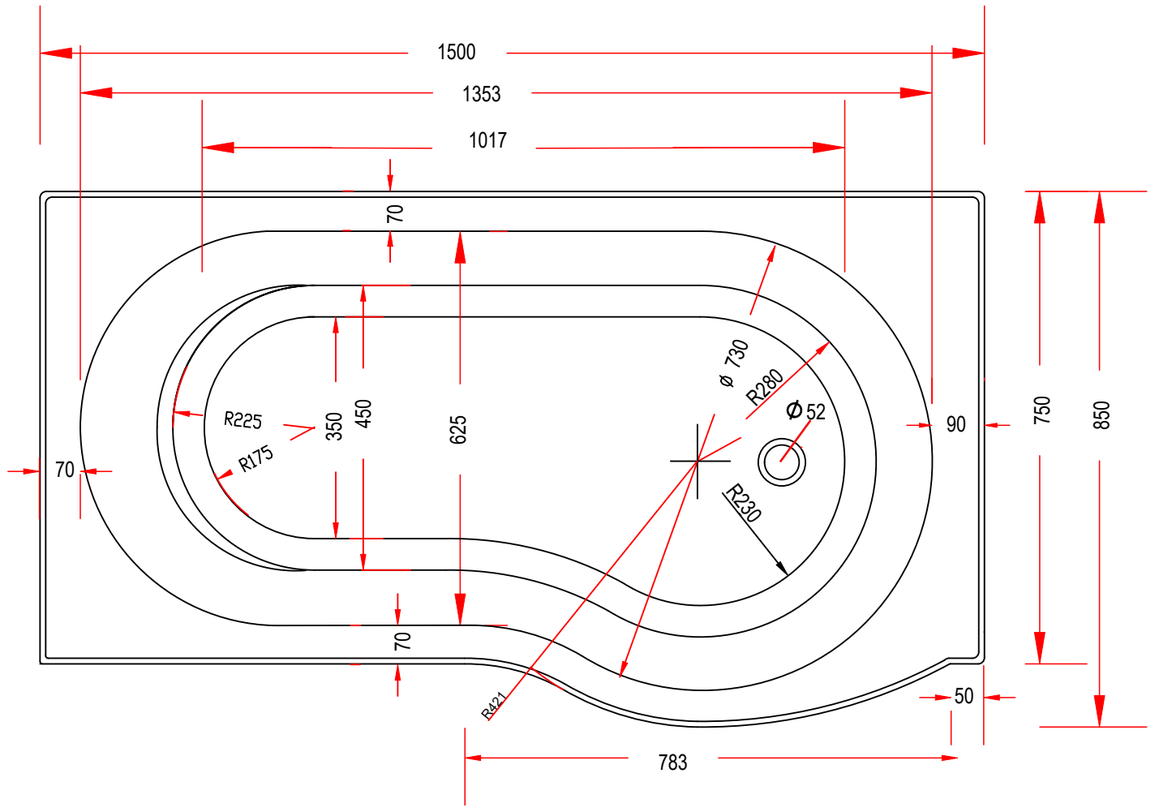

Eastbrook

P SHAPED BATH RH 1500 x 850mm